42GW

CODE : 42GW9037 - 42GW9038

42GW 200/300/400

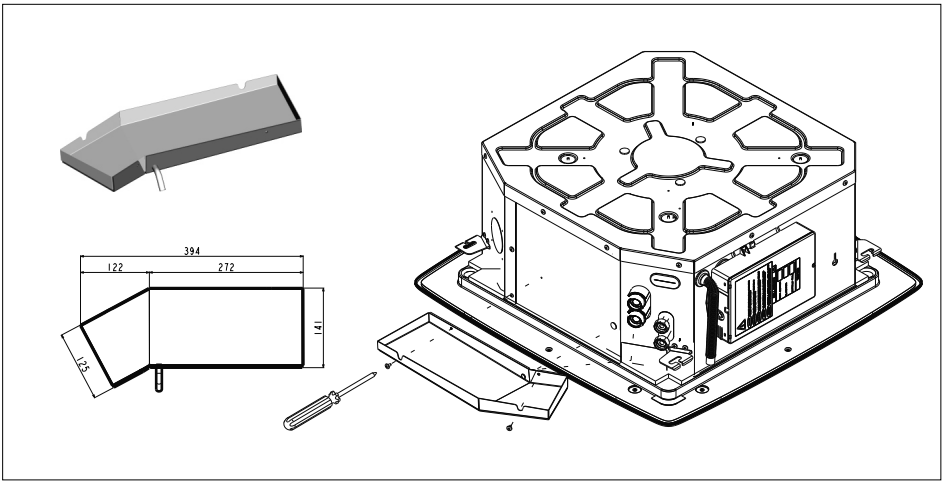
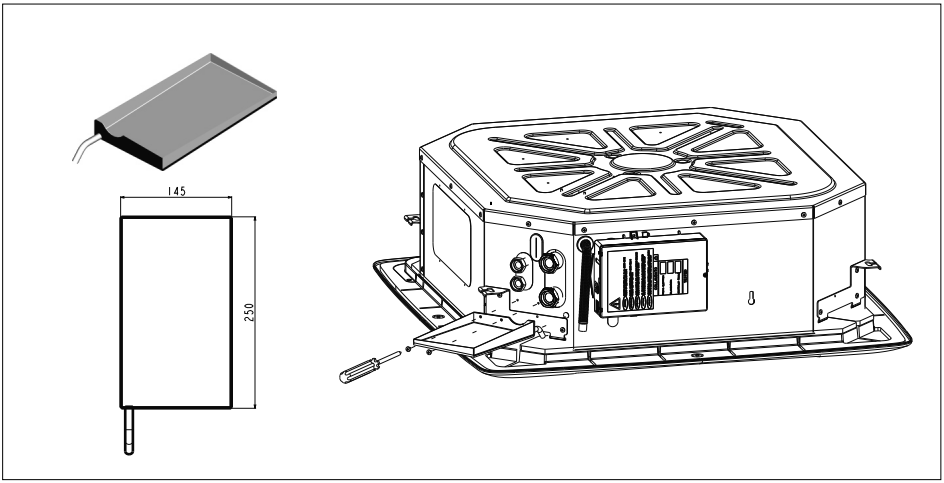
42GW 500/600/700